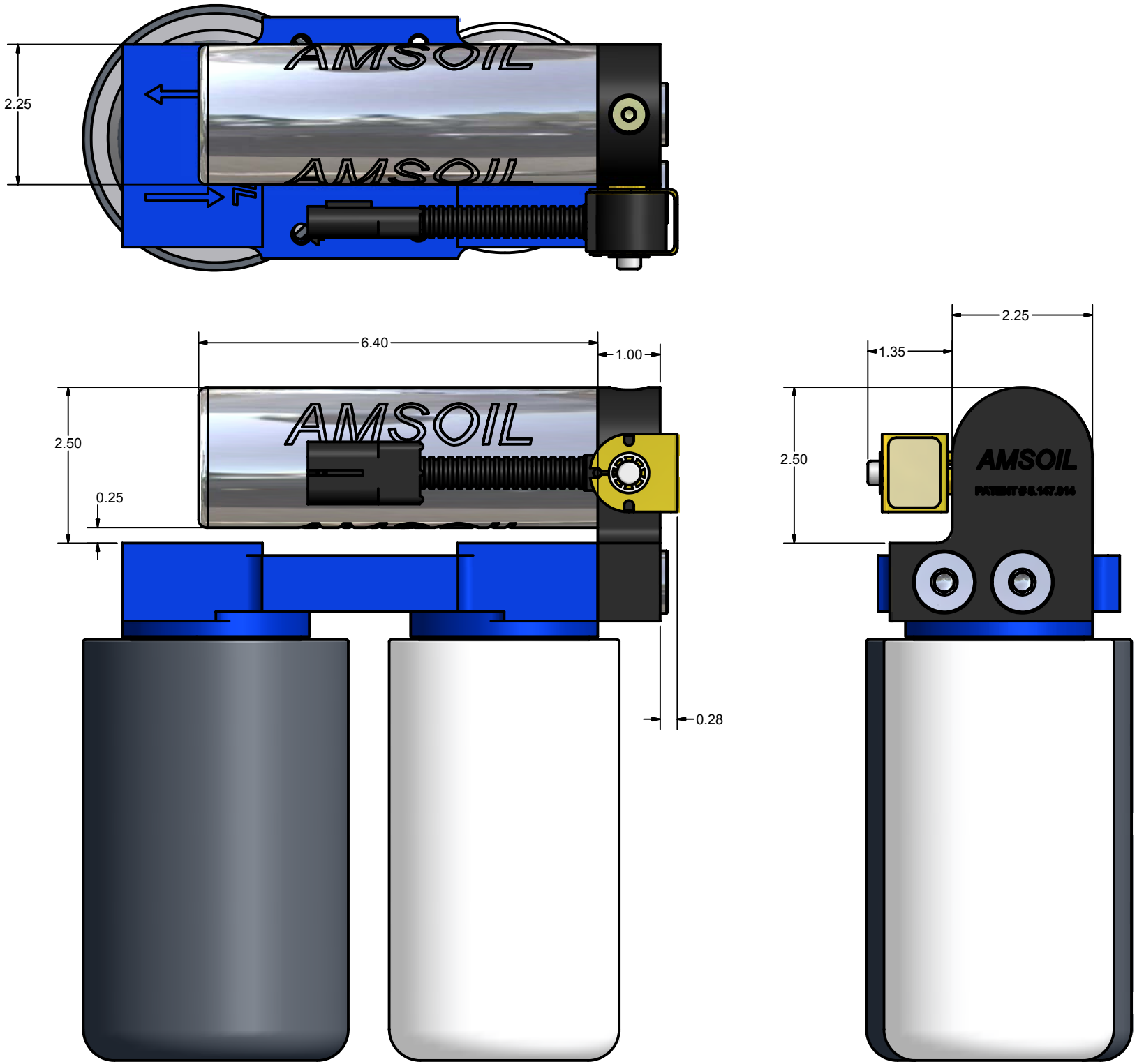
2.25
AMSOIL
AMSOIL
6.40
1.00
2.50
0.25
AMSOIL
0.28
2.25
1.35
2.50
AMSOIL
PATENT # 6,147,014